MAESTRO **HLC 84-G1 C BM**

Infinity G1 compact oven. Special edition by Italdesign Giugiaro





40L HydroClean SurroundTemp

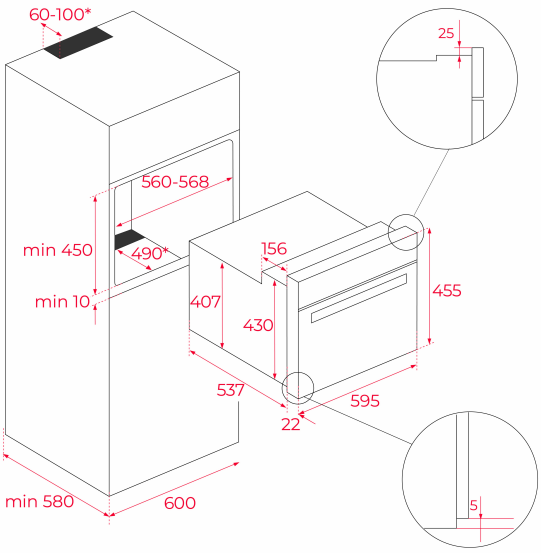

REFERENCE

REF: 111160015 EAN: 8434778022391

FEATURES

Infinity G1 special edition
Designed in Italy by Italdesign Giugiaro
Multifunction SurroundTemp oven + Microwave
Exclusive matte black finishing
11 cooking functions
5 power levels + 1000 W microwave power
2500 W grill
HydroClean system
Touch control display with knobs
Electronic timer (Delay/Start function)
Chrome supports with 5 cooking levels
Automatic disconnection security system
Anti-tip deep tray, reinforced grid and glass tray
Capacity (gross/net): 41 /40 litres

DIMENSIONS

Product height (mm): 455
Product width (mm): 595
Product depth (mm): 559
Product length (mm):
Net weight (Kg): 30,0

TECHNICAL DETAILS

Energy Efficiency Class: -
Power rate (V): 220-240
Frequency (Hz): 50
Maximum Nominal Power (W): 3400

COLOURS

111160015 Black Matt