BKR30P

30" All fridge Built-in Column
Total NoFrost - Stainless Steel Inner Liner

BENESSI



PRINCIPAL FEATURES

- Truly built in with Stainless Steel inner liner.
- Large and easy to read digital display.
- Soft close Hettichi hinge.
- Touch Electronic control.
- Full Extension Drawers.
- Soft close metal drawers.
- Metal door bins.
- Refrigerator adjustable temp from +35 °F (2 °C) to +46 °F (8 °C).
- Chiller zone adjustable temp from +30 °F (-1 °C) to +41 °F (5 °C).
- Sabbath mode , Holiday mode, ECO mode, Showroom mode.
- Height adjustable.
- Full size Sky LED Light and side LED lighting.
- Metal cooling with real S.S back panel.
- 3D door installation adjustment, for easy door panel alignment.
- Ultra quite 41 dB(A).
- Appliance leveling from the front and rear.
- Interior filtered water dispenser.

TECHNICAL DETAILS

Supply Voltage, V/Hz	110-127 V ~ 60 HZ 2,5 A
Rated Current, A	2
Noise Level,dBA	41

GENERAL PROPERTIES

Cooling System	Total No frost Cooling
Cooling System	Electronic Control
Control Display Type	LED
Automatic Defrost	Yes
Water dispenser	Yes
Interior Lighting	Full size Sky LED Light and side LED lighting
Spill-proof Shelves	3
Crisper	4 (1 Cripser + 3 Chiller zone)
Door Racks	3 (2+1 gallon Rack)
Compressor	Variable speed with inverter
Fan Ventilation	Yes
Air Duct	ABS with stainless steel cover
Energy Star Qualified	Yes
Climate Class	SN-T
Annual Energy Consumption, kwh/year	314
Refrigerant	R600a
Total Net Volume	15.93 cu-ft (451L)

TEMPERATURE RANGES

Refrigerator	from +35 °F (2 °C) to +46 °F (8 °C).
Chiller zone	from +30 °F (-1 °C) to +41 °F (5 °C).

DIMENSIONS & WEIGHT

Product Dimension HxWxD, in (mm), depth without door panel.	83 9/16" x 29 3/4" x 23 5/16" (2123 x 756 x 592)
Package HxWxD, in (mm)	90 9/16" x 32 1/4" x 26 3/8" (2300 x 820 x 670)
40' HC Loading Quantity	45
Net weight (kg)	152
Gross weight (kg)	171
Wood panel cutout dimensions (HxWxD) in (mm), depth with panel and without handle	84" x 30" x 25" (2134 x 762 x 635)

BKR30P

30" All fridge Built-in Column
Total NoFrost - Stainless Steel Inner Liner

BENESSI

WOOD PANEL CUTOUT DIMENSION AND INSTALLATION CLEARANCE

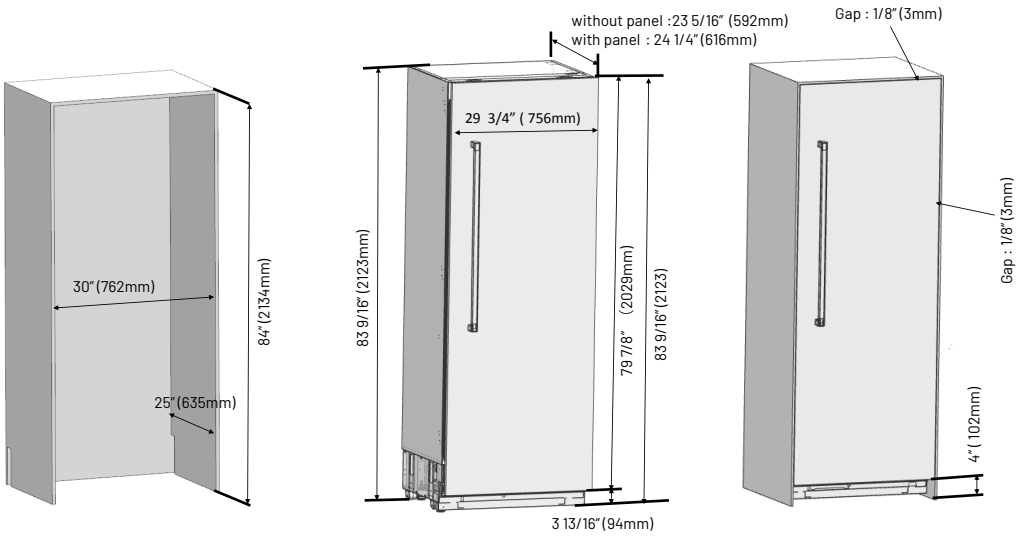

INSTALLATION DIMENSIONS

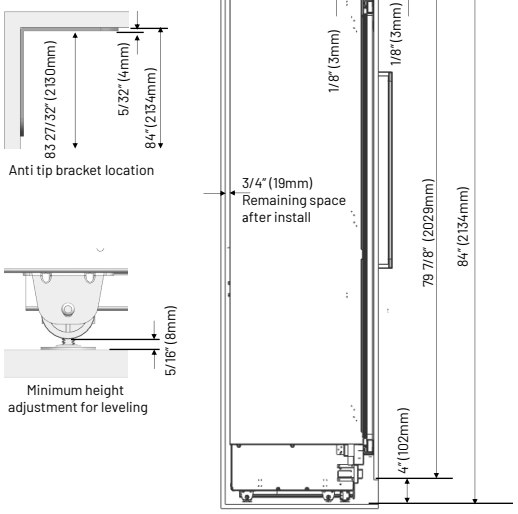

	A	B
standard	4"(102)	84"(2134)
minimum	3 3/4"(95)	83 3/4" (2127)
maximum	5 5/16" (135)	85 5/16" (2167)

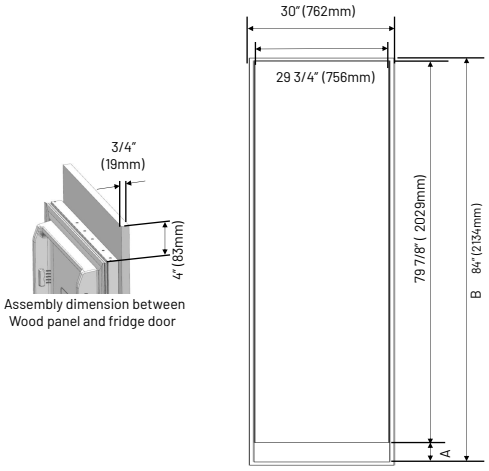

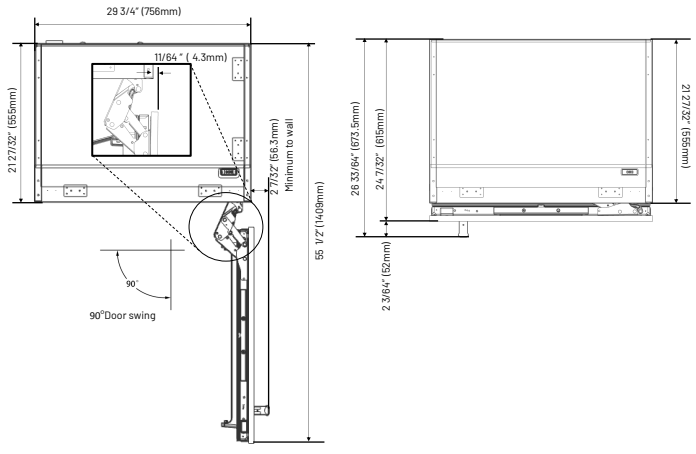

ANTI TIP BRACKETS

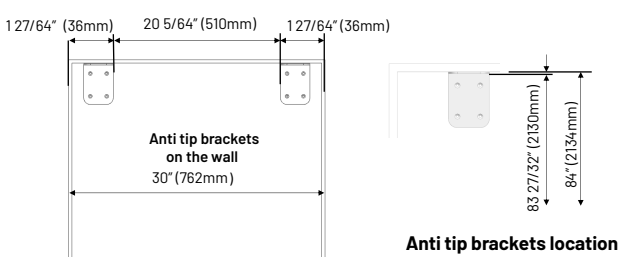

Anti tip brackets location

PLUMBING AND ELECTRICAL LOCATION

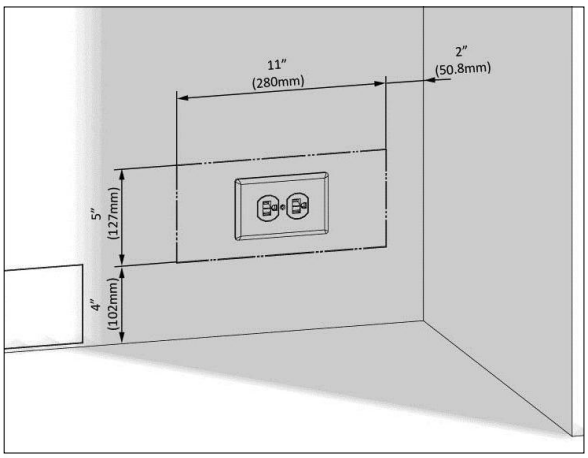

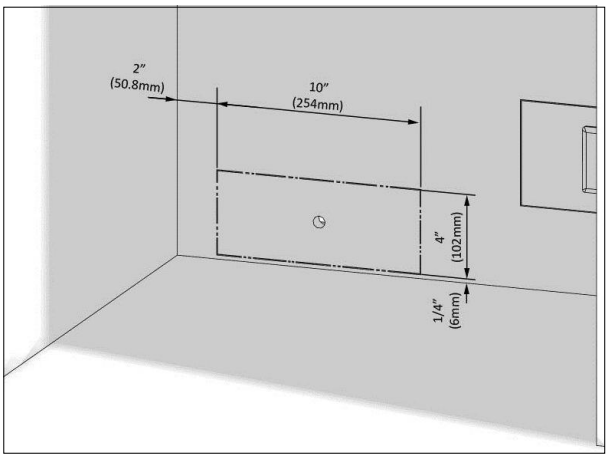

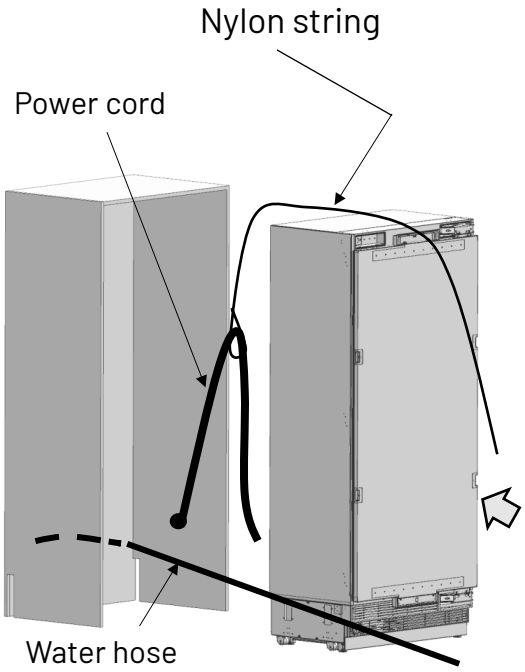

Keep open for Power cord and Water line if necessary

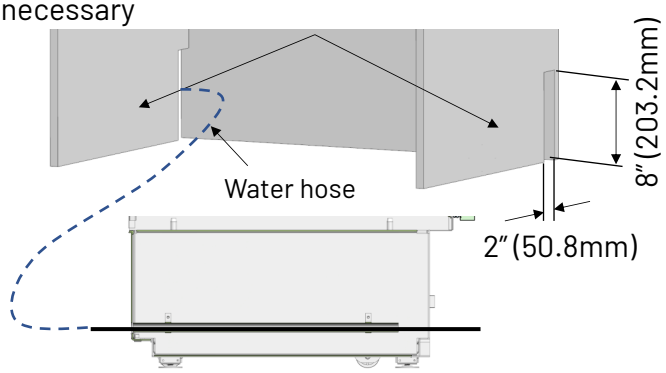

Power cord installation

Use nylon string to prevent the cable from getting jammed.

Plumbing

For ¼" braided stainless units with ice maker and water

Water hose installation

a minimum length of 60" (1.5 meters) and a diameter of ¼" for water connections