BKFR24P 24" Panel-Ready Refrigerator

BENESSI





PRINCIPAL FEATURES

- OptiView™: OptiView LED lights
- EventLift™: Easily rearrange the shelving without removal using the EvenLift system
- ProVent™: Uniform air circulation maintains consistent temperatures throughout the appliance resulting in better food preservation
- Antibacterial Stainless Steel Interiors Drawers: Achieve the highest food quality by storing food in the stainless steel interior drawer that shields againt the spread of bacteria
- Total No Frost: No more frost build-up that requires defrosting
- EquiLance™: Achieve a seamless built-in look with Benessi's innovative door hinge
- Soft - Close System: State-of-the-art closing system ensures refrigerator crisper drawer close smoothly and quietly.
- Vacation: Reduce energy usage and optimize food storage during vacations using the setting
- Shopping: Use the shopping function to quickly cool room temperature or food recently placed into the refrigerator
- Sabbath Mode

TECHNICAL DETAILS

Total Absorbed Current (A)	2.5
Voltage (V)	115
Frequency (Hz)	60
Power Cord Length	78 3/4" (2 m)
Plug Type	Nema 5-15P
Climate Class	SN/T
Refrigerant (Gas)	R600a
Water Connection / Female Attachment	N/A
Estimated Yearly Electricity Use	296 kwh

GENERAL PROPERTIES

Equilance Hinge	YES
Soft-Closing Glides	YES
Low Vibration	YES
OptieView (Led Light Spots)	YES
Shelves	3
Type Of Shelves	GLASS
Door Bins	3
Fridge Interior Drawers	3
Freezer Drawers	N/A
Evenlift Shelves	YES
Full Extension Shelves 90° Door Opening	NO
Full Extension Drawers 90° Door Opening	YES
Defrost Process	AUTOMATIC
Door Open Alarms	YES
Shopping Fridge	YES
Shopping Freezer	NO
Power Failure Alert	YES
Ice Maker With Water Filter	NO
Water Dispenser With Water Filter	NO
Water Filter Cartridge	NO
Net Capacity	13 cuft (368 l)

TEMPERATURE RANGES

Climate Zones	1
Compartment 1 / Upper Temperature	from 34 °F (1 °C) to 45 °F (7 °C)

DIMENSIONS & WEIGHT

Height Of The Product (Minimum)	83 1/2" (2120 mm)
Adjustable Feet Height	up to 1" (25 mm)
Width Of The Product	23 7/8" (608 mm)
Depth Of Product Without Handle	24" (610 mm)
Cut-out Height	84" (2134 mm)
Cut-out Width	24" 610 mm)
Cut-out Depth	min 24" (610 mm) + panel thickness for flush install
Net Weight	291 lbs (132 kg)
Gross Weight	335 lbs (152 kg)

BKFR24P 24" Panel-Ready Refrigerator

BENESSI

FRONT VIEW

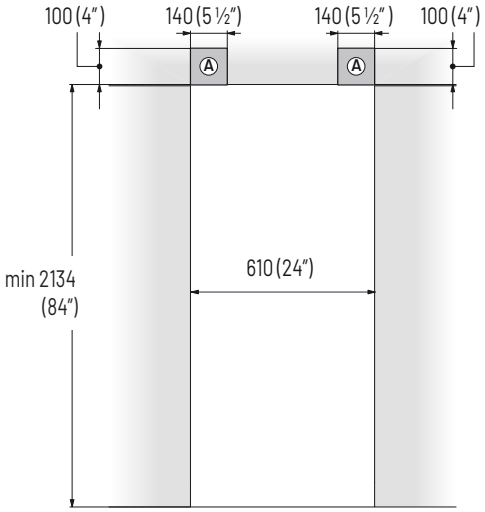

A
Area to be left clear for the anti-tipping brackets

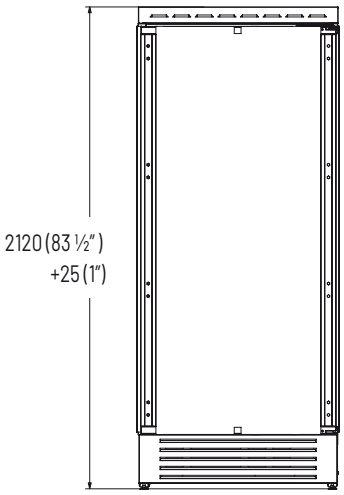

SIDE VIEW

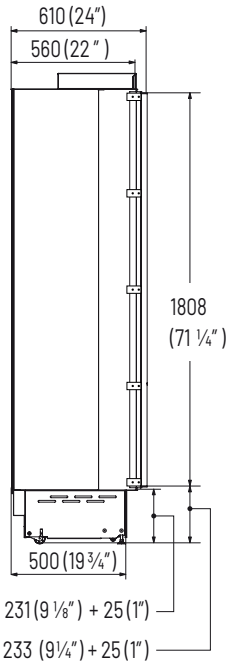

CUSTOM PANELS INFORMATION

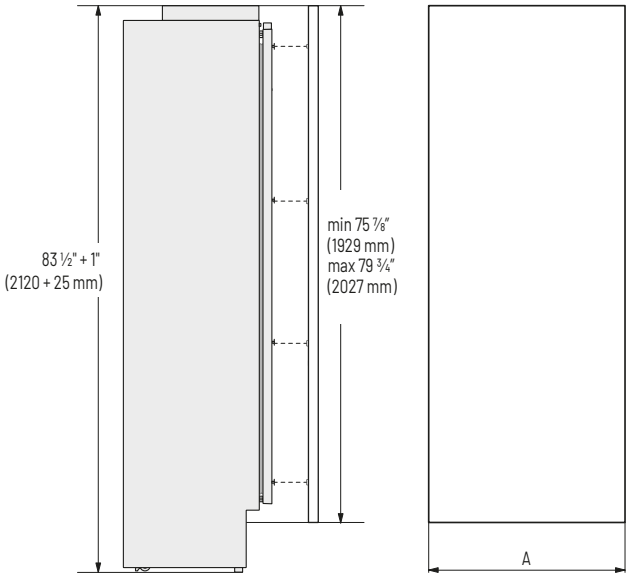

Serie	A
24"	23 ¾" (604 mm)

PLINTH SIZE

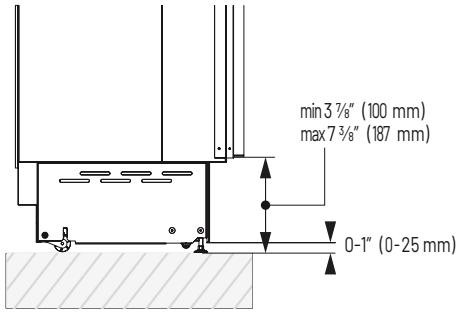

INTEGRATED PANEL RECOMMENDATIONS

Panels with thickness ranging between 3/4" in (18 mm) and 1 1/8" in (28 mm)

Door Panels Weight Max	75 lbs (34 kg)
Drawer Panels Weight Max	N/A lbs (N/A kg)

BKFR24P 24" Panel-Ready Refrigerator

TOP VIEWS

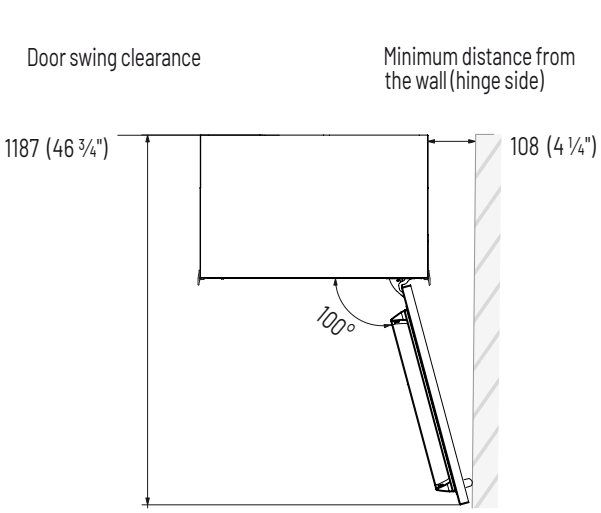

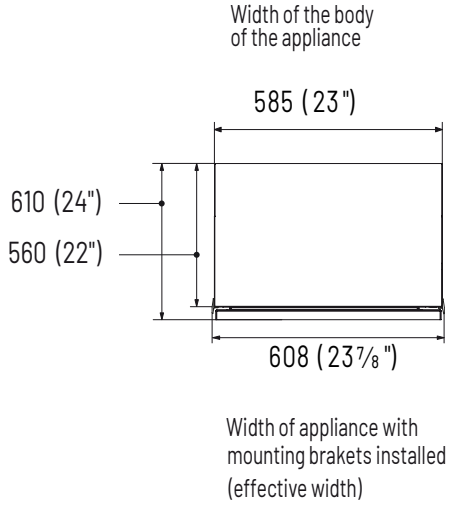

ELECTRICAL CONNECTION

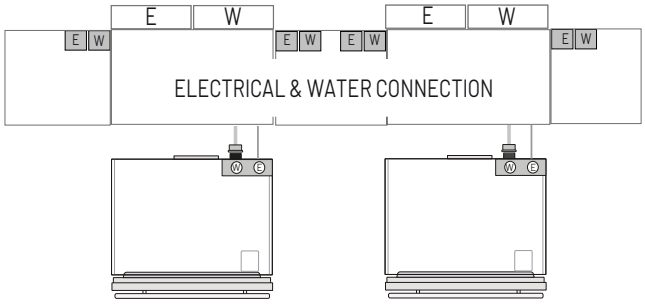

Electrical and water connections (if applicable) should be reachable without having to uninstall the appliance. If the connections must be made directly behind the appliance then it is recommended to recess those connections.

IMPORTANT: do not put the water shut-off valve behind the appliance where it will be inaccessible.