BKRUD243SS 24" Stainless Steel Undercounter Trimode Drawers

BENESSI





PRINCIPAL FEATURES

- Aisi 304 stainless steel body
- Stainless steel interior finish
- Aisi 304 stainless steel anti-bacteria interior
- Optiview: multi - LED light array (top interior) provides excellent illumination to the entire interior
- Soft close drawer
- Full color TFT smart display
- Acoustic and visual signals
- Total no frost 100% automatic system
- Insulated variable speed compressor maintains temperature with low vibration
- Sabbath mode
- Front and rear adjustable feet up to 25 mm
- TriMode™: Total Flexibility, make the bottom drawer a refrigerator, fresh food space, or freezer with the control menu

GENERAL PROPERTIES

Reversible door	NO
Equilance hinge	NO
Soft-Closing glides	YES
Low vibration	YES
OptiView (Led Light Spots)	YES
Freezer Drawers	2
Full Extension Shelves 90° Door Opening	NO
Full Extension Drawers 90° Door Opening	YES
Defrost Process	AUTOMATIC
Door Open Alarms	YES
Shopping Fridge	NO
Shopping Freezer	YES
Power Failure Alert	YES
Ice Maker With Water Filter	NO
Humidity control	NO
Active carbon filter	NO
Air filter control	NO
Volume Compartment 1 (cbf)	3.8
Total Net Volume (cbf)	3.8
Total Gross Volume (cbf)	3.8
Estimated Yearly Electricity Use	294 kwh

TEMPERATURE RANGES

Climate compartments	1
Temperature ranges	from 9 °F (-13 °C) to -9 °F

TECHNICAL DETAILS

Total Absorbed Current (A)	2
Voltage (V)	115
Frequency (Hz)	60
Power Cord Length	118 1/8" (3 m)
Plug Type	NEMA 5-15P 125V; 15A
Climate Class	SN/T
Noise level (dB)	41
Refrigerant (Gas)	R600a
Water Connection / Female Attachment	N/A

DIMENSIONS & WEIGHT

Height Of The Product (Minimum)	34" (865 mm)
Adjustable Feet Height	up to 1" (25 mm)
Width Of The Product	23 1/2" (598 mm)
Depth Of Product Without Handle	22 1/2" (572 mm)
Wall cavity Height	34 1/4" (870 mm)
Wall cavity Width	23 5/8" (600 mm)
Wall cavity Depth	min 23 5/8" (600 mm)
Net Weight	132 lbs (60 kg)
Gross Weight	165 lbs (75 kg)

BKRUD243SS 24" Stainless Steel Undercounter Trimode Drawers

BENESSI

PRODUCT SPECIFICATIONS AND DIMENSIONS

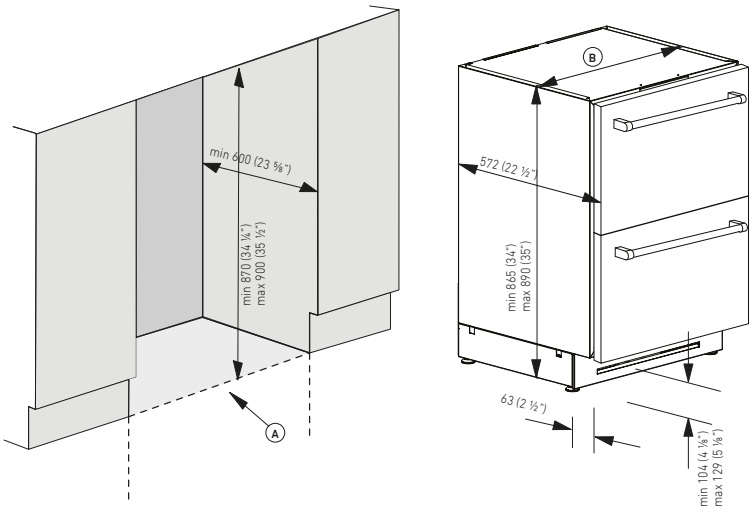

TECHNICAL DATA	
Niche Width **A** (mm)	23 5/8"
Unit Width **B** (mm)	23 1/2"

FRONT VIEW

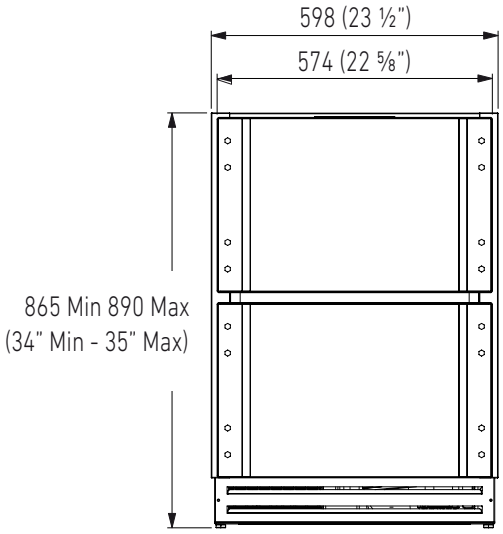

SIDE VIEW

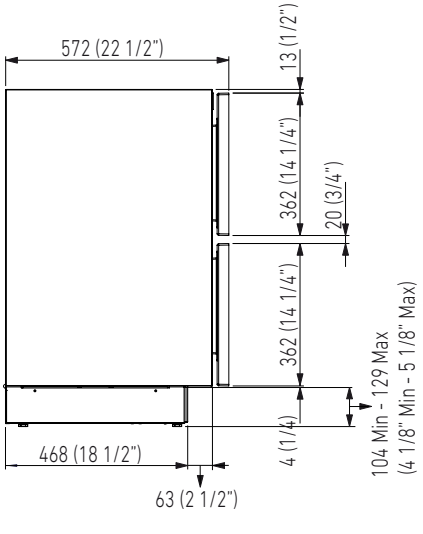

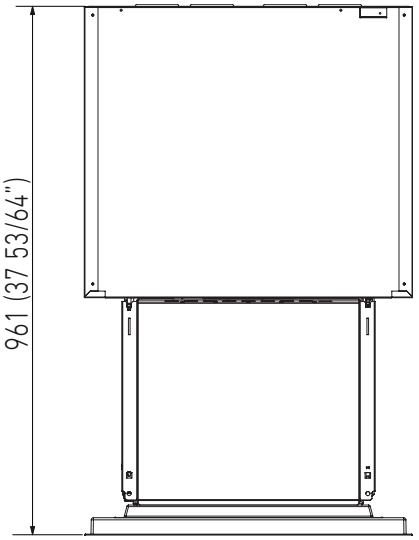

For installation specifications, please consult with Benessi. For optimum installation, we recommend using the actual product as the best guide.

Based on the adjustment of the feet and the height of the panel from the floor, the customer defines the perforated plinth to be installed on the equipment

ELECTRICAL CONNECTION

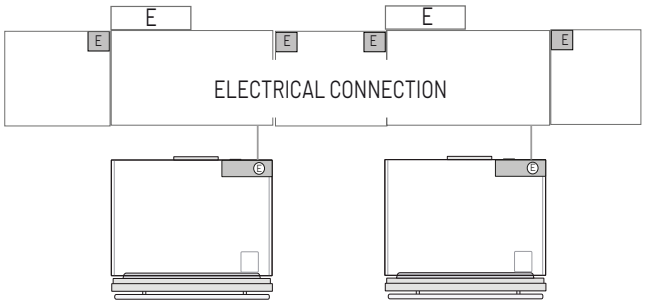

Electrical and water connections (if applicable) should be reachable without having to uninstall the appliance. If the connections must be made directly behind the appliance then it is recommended to recess those connections.

IMPORTANT: do not put the water shut-off valve behind the appliance where it will be inaccessible.

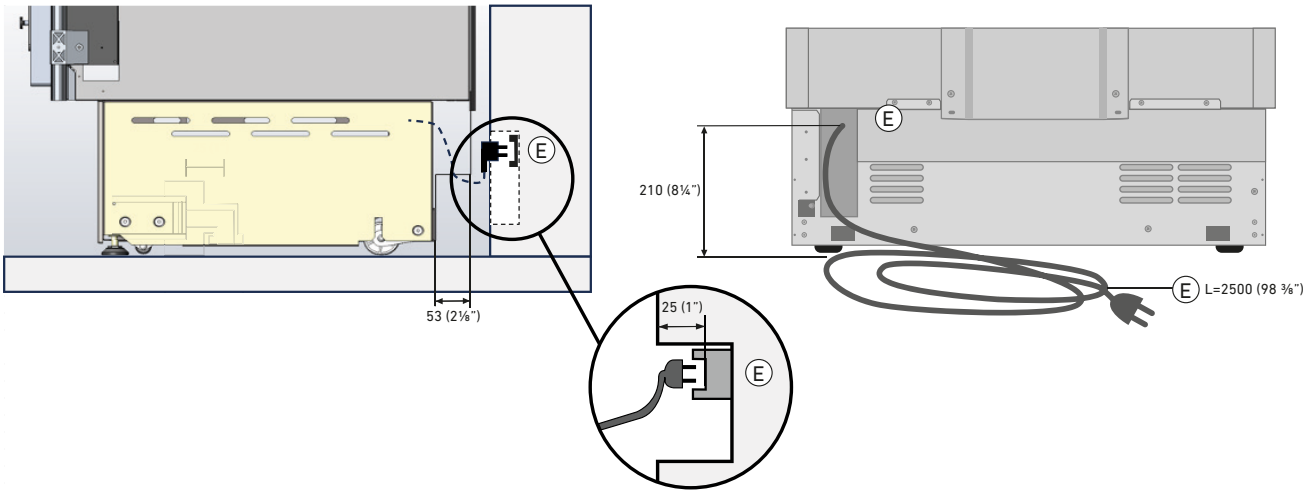

For installation specifications, please consult with Benessi. For optimum installation, we recommend using the actual product as the best guide.